FJDTrion

DelGeo

ПОСТАВКА ГЕОДЕЗИЧЕСКОГО ОБОРУДОВАНИЯ

FJD Trion T1

Quick Start

2026.09 Rev. 1.0

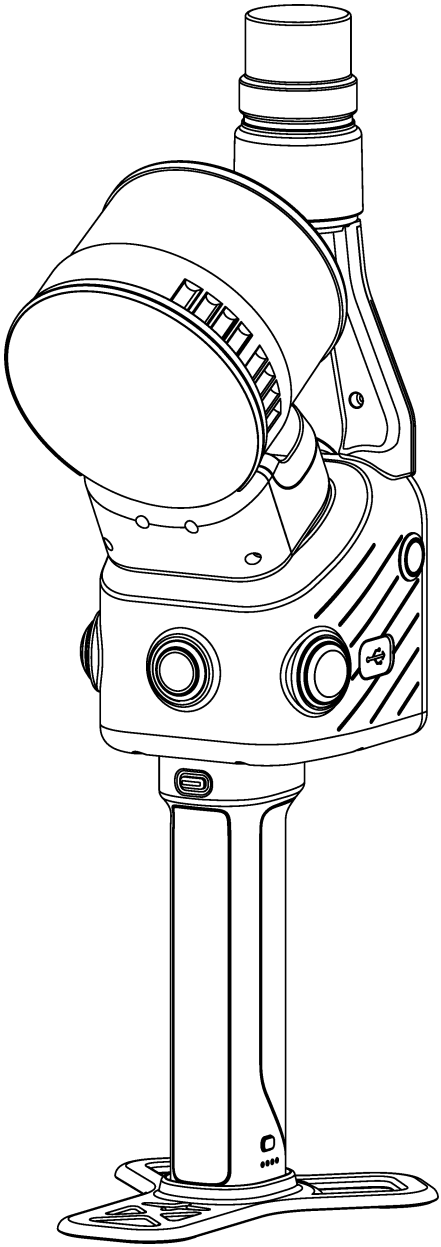

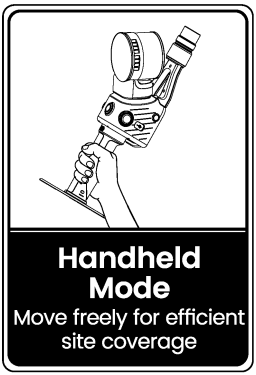

Handheld Mode

Move freely for efficient site coverage

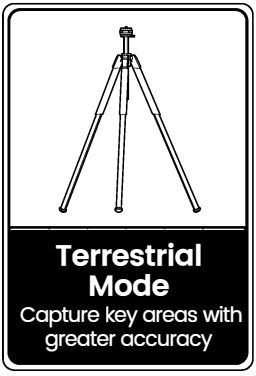

Terrestrial Mode

Capture key areas with greater accuracy

1 Getting Started

① Attach the battery to the scanner.

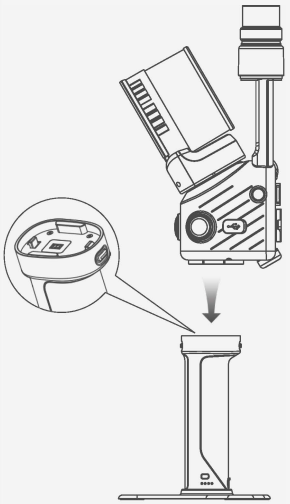

② Hold the battery button for 1 second to power on.

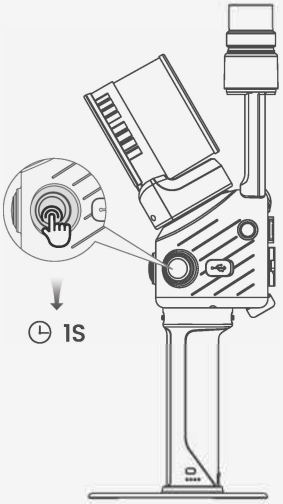

③ Connect to the Scan App via Wi-Fi.

- Connect to the Scan App via Wi-Fi.
- Open the Scan App and select T1.
- Wi-Fi: FJT1*****
- Password: fjdtriont1

2 Handheld Mode

① Hold the Scanner.

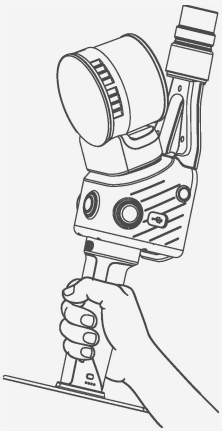

② Select Handheld Mode.

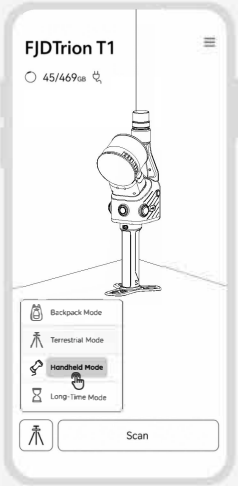

③ Start Scanning.

- Place the device still on a level surface before scanning.

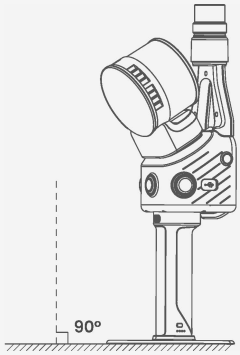

- Tap Scan to start.

3 Terrestrial Mode

① Remove the RTK module and install the quick-release plate.

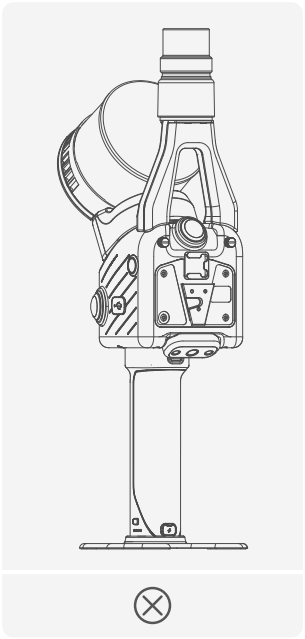

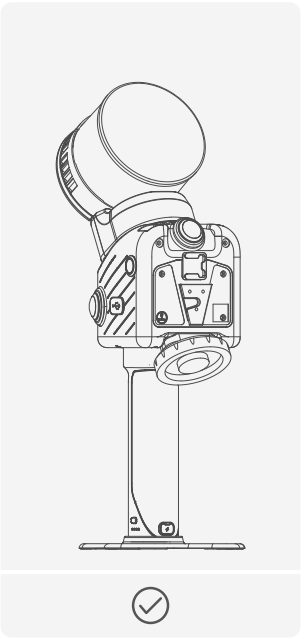

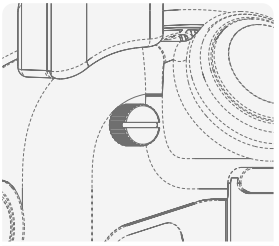

RTK latches ×2



Quick-release plate

② Set up the tripod and secure the quick-release lock.

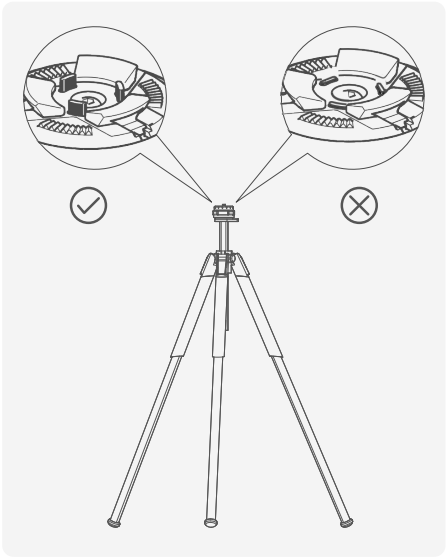

③ Mount the device on the tripod.

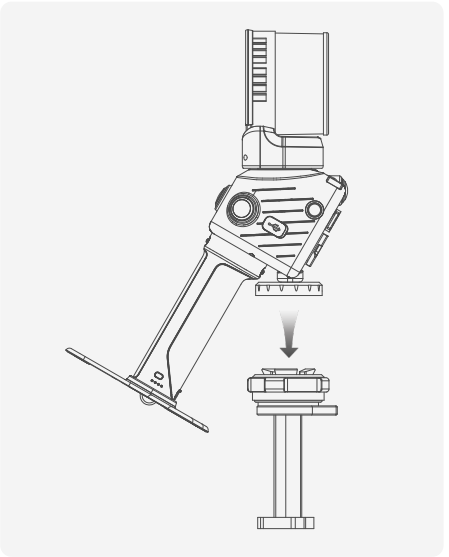

4 Select a Mode

① Select a mode from the lower-left corner of the Scan screen. Choose Handheld Mode or Terrestrial Mode.

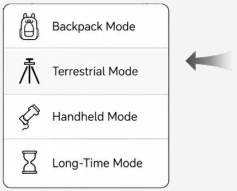

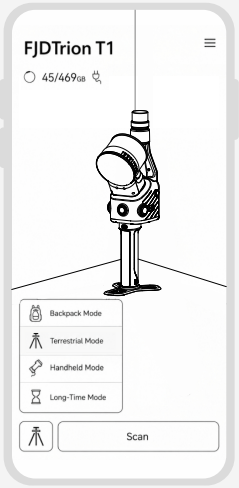

② Terrestrial Mode.

- Level the device and start scanning when "Device Leveled" turns green.

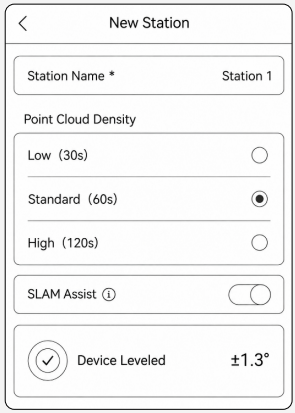

Notes

- Select the appropriate mode before scanning.
- The device may restart when switching modes.
- RTK is not supported in Terrestrial Mode.
- Start scanning when "Device Leveled" turns green.
- SLAM Assist helps establish the relative position between scan stations.

FJD Trion Scan

© FJDynamics. All rights reserved.

Specifications and included accessories may vary by region and package.

Transforming the World with World Models

FJDTrion