DelGeo

ПОСТАВКА ГЕОДЕЗИЧЕСКОГО ОБОРУДОВАНИЯ

FJDTrion

FJDTrion

FJD Trion X1

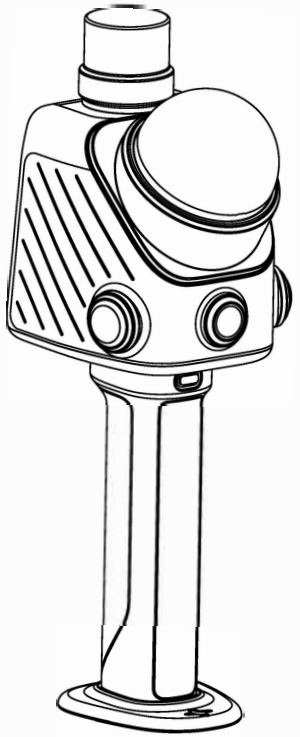

Quick Start Guide

V1.0

Get Started

① Charge the Battery

- Connect the battery to the charger. Fully charge the battery before first use.

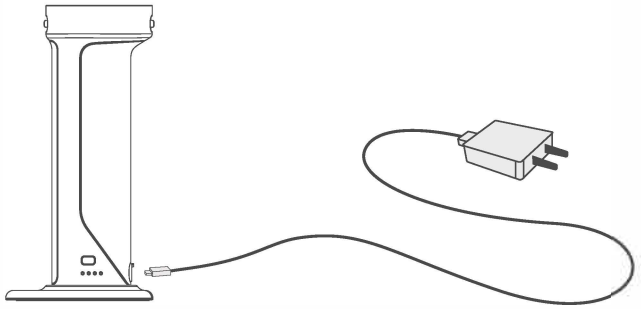

② Install the Battery

- Press and hold both side buttons, then slide the battery fully into the main unit and release the buttons to lock it in place.

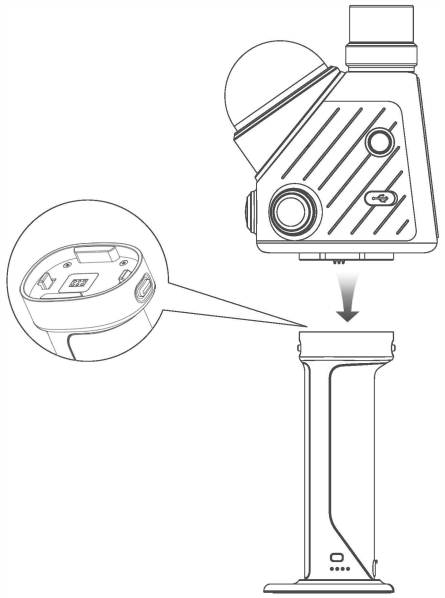

③ Power On

- Press and hold the power button for 1 second. Wait for the status indicator to turn on.

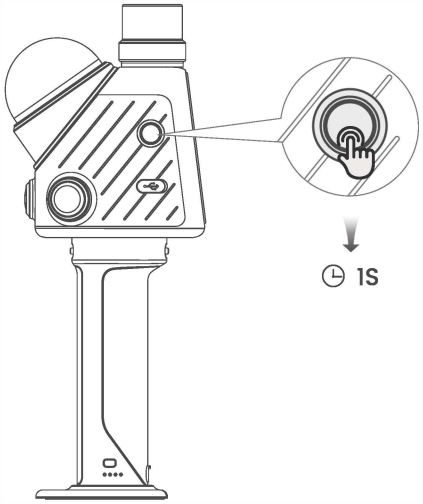

First Use Workflow

❶ Charge battery ❷ Install battery ❸ Power on X1 ❹ Start scanning

❺ View data in FJD Trion Model & Model Web

Resources & Support

Support Center | FJD Trion Model | Model Web | FJD Trion Scan

Important

This Quick Start Guide provides basic setup instructions and does not replace the full User Manual. Refer to the User Manual for scanning, data processing, and safety instructions.

For local service, contact your dealer or FJD Trion representative. When contacting support, have the device serial number ready.

© FJDynamics. All rights reserved.

Specifications and included accessories may vary by region and package.

Transforming the World with World Models

FJDTrion

DelGeo
ПОСТАВКА ГЕОДЕЗИЧЕСКОГО ОБОРУДОВАНИЯ